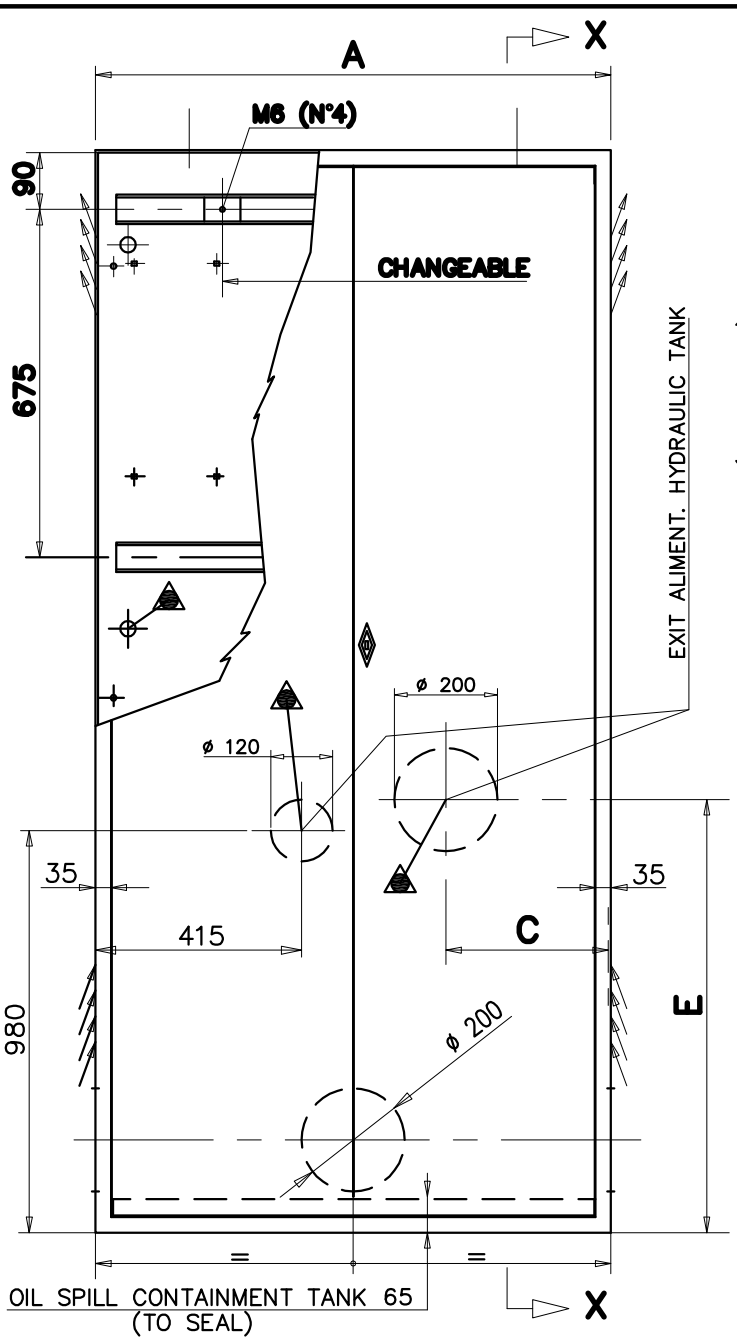

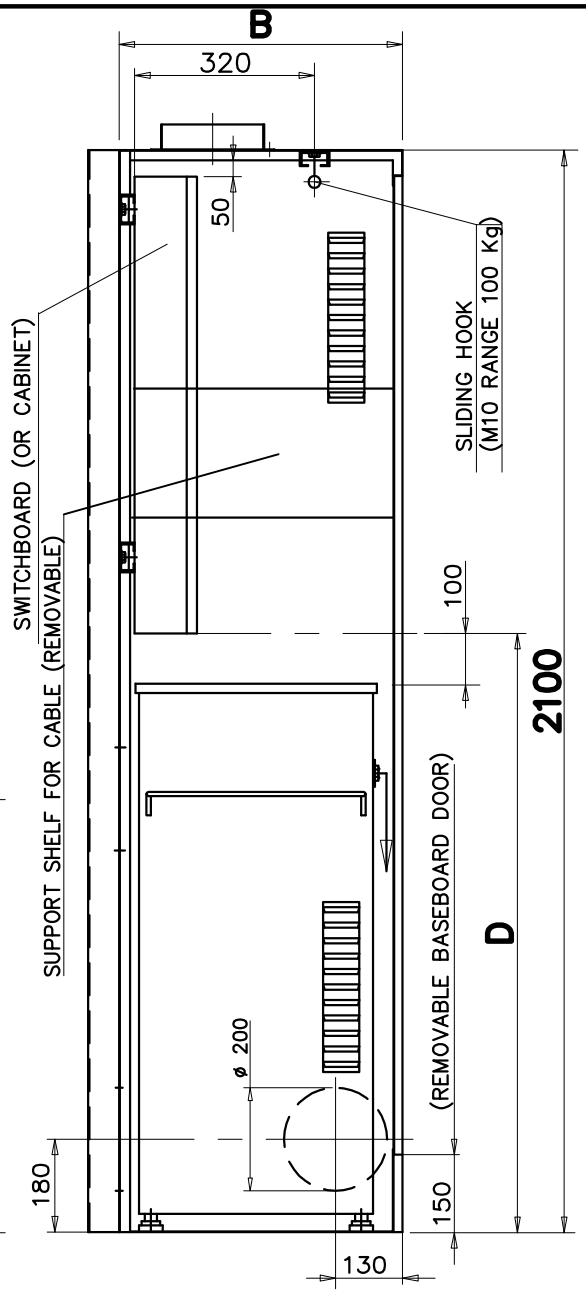

SECTION: X–X

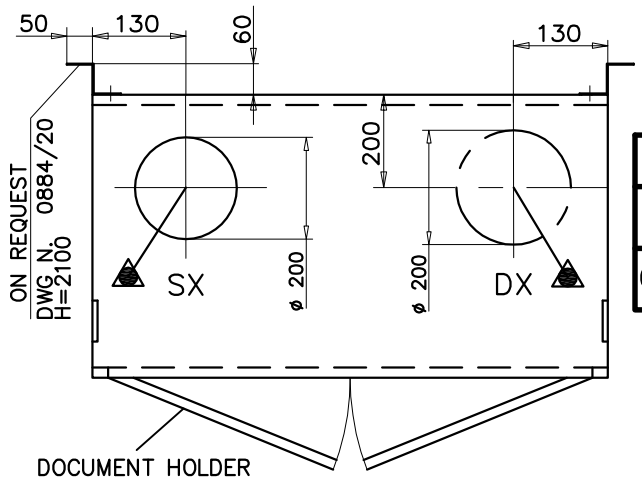

P. UNIT MODEL	A	B	C	D	E	MASS Kg	FIGURE N°
HL320/R	800	400	253	1200	1140	65	0884/CM3/R-...
CM320/R MARK2							

NOTE:

– AUXILIARY TANK AGAINST POWER UNIT OIL SPILLS (EN 81.20) SEE DWG N. 9290 CHAPTER 2

▲ – PRE–CUT OPENING FOR WIRING AND PIPING ACCESS

UT			CABINET ASSEMBLY (DOUBLE DOORS) FOR TANKS: HL320/R and CM320/R MARK2	DATE 03/19
				DWG N. 9680/2A1

9680/2A1–IN